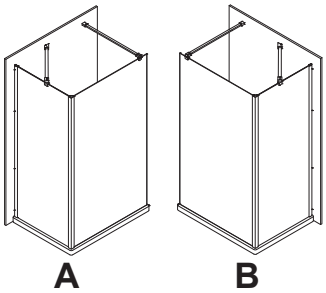
A
B

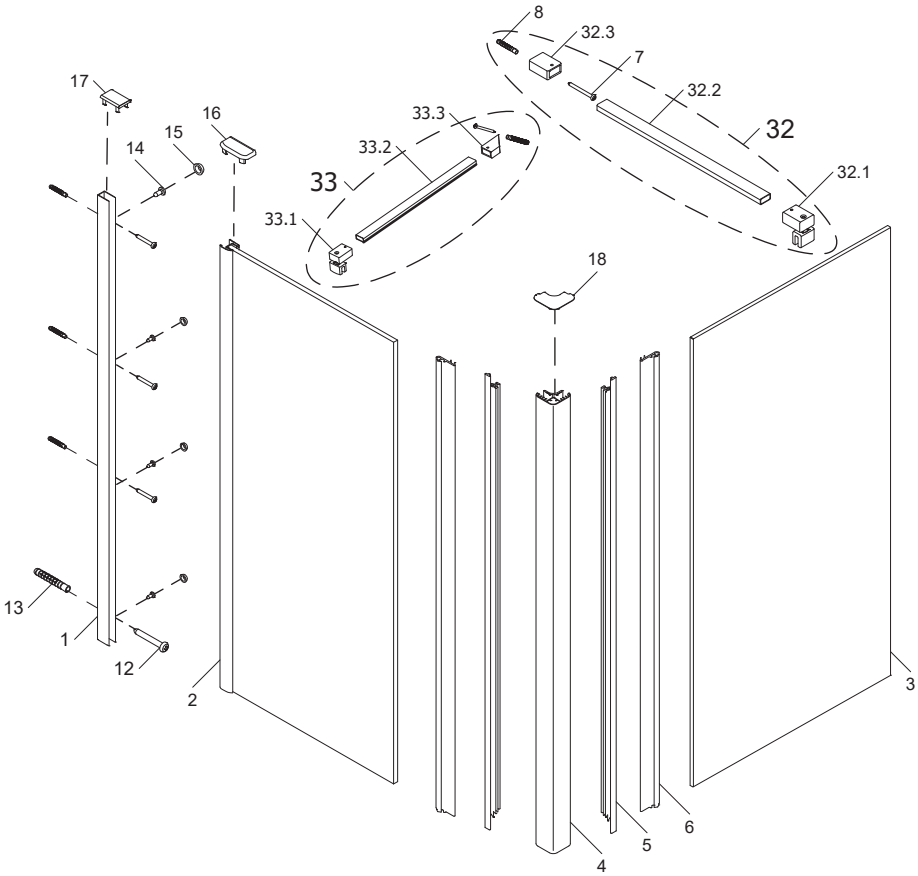
8
32.3
7
32.2
32
32.1
17
16
15
14
33.3
33.2
33
33.1
18
13
1
12
2
3
6
5
4

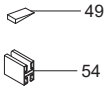
49
54